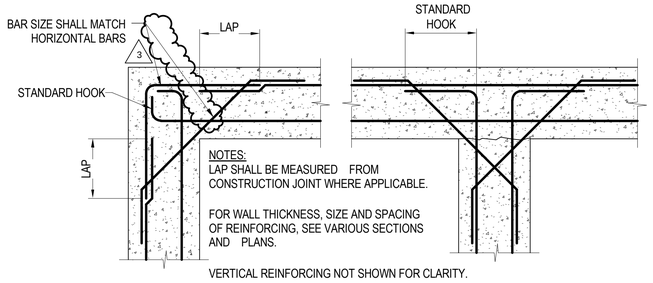

REINFORCING DETAILS AT WALL INTERSECTIONS

NO SCALE

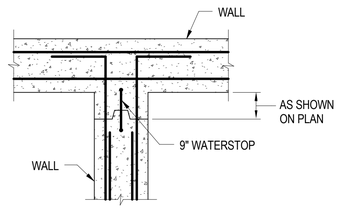

VERTICAL CONSTRUCTION JOINT IN WALLS

NO SCALE

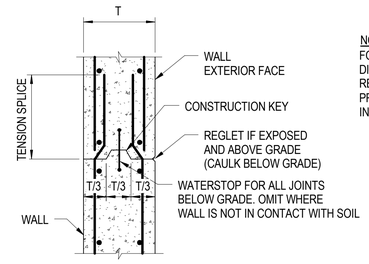

HORIZONTAL CONSTRUCTION JOINT IN WALLS

NO SCALE

NOTE:
FOR OPENINGS LESS THAN 12" DIAMETER, NO ADDITIONAL REINFORCING IS REQUIRED PROVIDED NO REINFORCING IS INTERRUPTED BY THE OPENING.

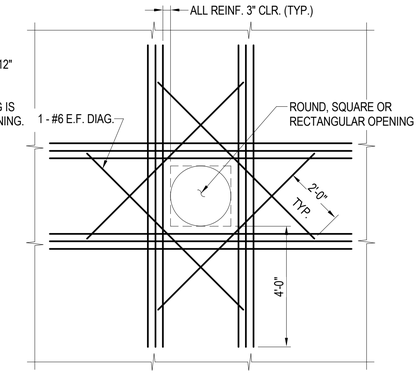

PROVIDE ADDITIONAL REINFORCING, (MINIMUM OF ONE-HALF THE NUMBER OF PRINCIPAL BARS INTERRUPTED BY THE OPENING) ON EACH SIDE AND EACH FACE OF THE OPENING.

ADDITIONAL REINFORCING AROUND OPENINGS

SCALE: NONE

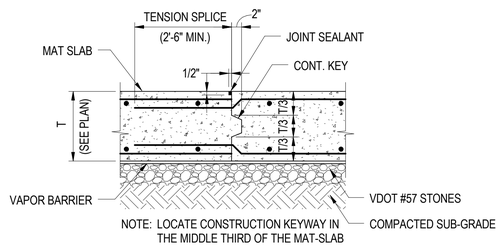

CONSTRUCTION JOINT IN MAT-SLAB

NO SCALE

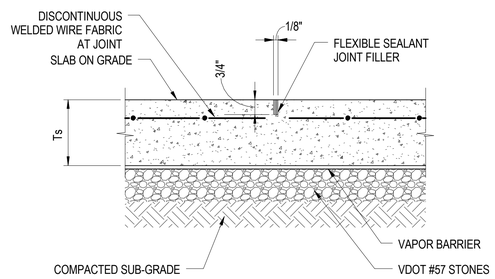

TYPICAL SLAB CONTROL JOINT DETAIL

NO SCALE

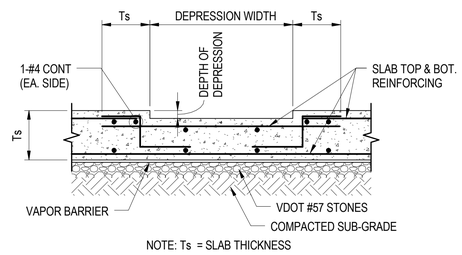

TYPICAL SLAB DEPRESSIONIN DETAIL

NO SCALE

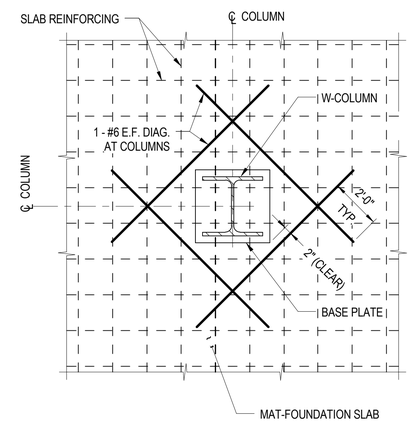

ADDITIONAL REINFORCING AT INTERIOR COLUMNS

SCALE: NONE

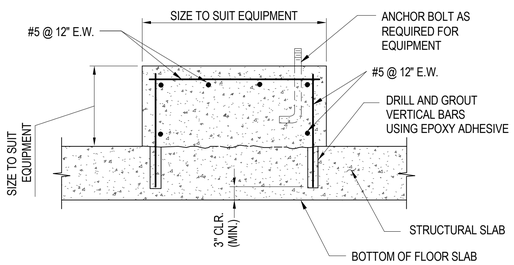

TYPICAL EQUIPMENT SUPPORT

NO SCALE

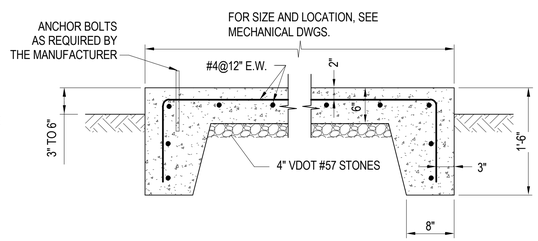

TYPICAL EXTERIOR EQUIPMENT PAD DETAIL

NO SCALE

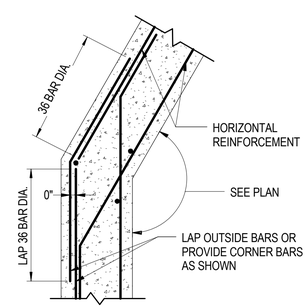

HORIZONTAL REINFORCEMENT OF SKEWED CONCRETE WALLS

NO SCALE

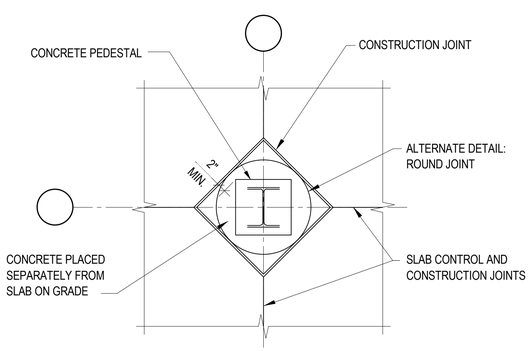

TYPICAL CONSTRUCTION JOINT DETAIL AT INTERIOR COLUMN

NO SCALE

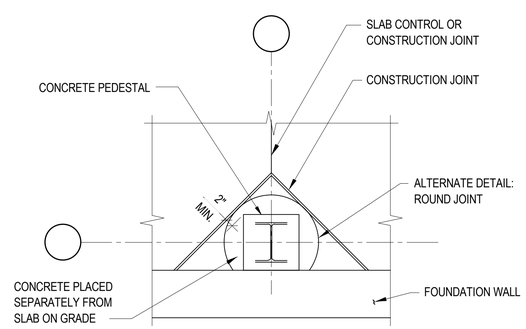

TYPICAL CONSTRUCTION JOINT DETAIL AT EXTERIOR COLUMN

NO SCALE

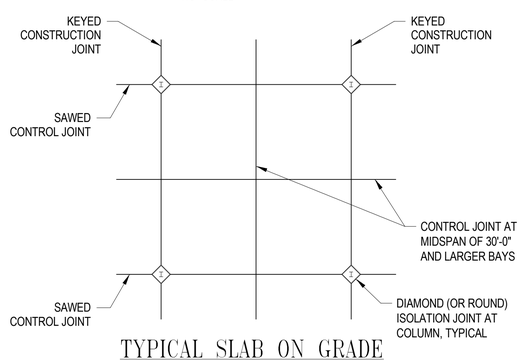

TYPICAL SLAB ON GRADE JOINTING DETAIL

NO SCALE

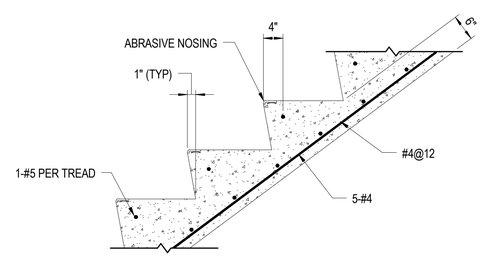

TYPICAL CONCRETE STAIR DETAIL

SCALE: NONE

ISSUED	
35% SUBMISSION	07/06/07
95% SUBMISSION	04/14/08
REVISED 95% SUBMISSION	05/16/08
BID DOCUMENTS	01/25/09
FOR PERMIT ONLY-NOT FOR CONSTRUCTION	01/25/09

COUNTY OF KING GEORGE, VIRGINIA

KING GEORGE COUNTY GOVERNMENT CENTER

10459 COURTHOUSE ROAD
KING GEORGE, VA 22485

SHERIFF'S OFFICE

KEY PLAN

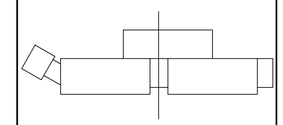

GRAPHIC SCALES

801 South Caroline Street, Baltimore, MD 21231
WHITMAN, REQUARDT & ASSOCIATES, LLP
ENGINEERS, ARCHITECTS AND PLANNERS

TYPICAL STRUCTURAL DETAILS

Drawing No.

S0.2

Scale: As indicated		
Date: 01/23/09	Sheet 113 of 223	
Des: CV	Drawn: AAB	Check: EF

3/3/2009 4:43:54 PM

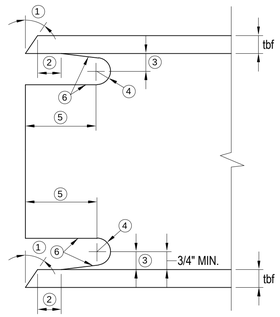

1. BEVEL AS REQ'D BY AWS D1.1 FOR SELECTED GROOVE WELD PROCEDURE
2. LARGER OF tbf OR 1/2" (PLUS 1/2 tbf, OR MINUS 1/4 tbf)
3. 3/4 tbf TO tbf, 3/4" MINIMUM (± 1/4")
4. 3/8" MIN RADIUS (PLUS NOT LIMITED, OR MINUS 0)
5. 3 tbf. (± 1/2")
6. SEE FEMA-353 FOR FABRICATION REQUIREMENTS.

BEAM PREPARATION FOR MOMENT CONNECTION

NO SCALE

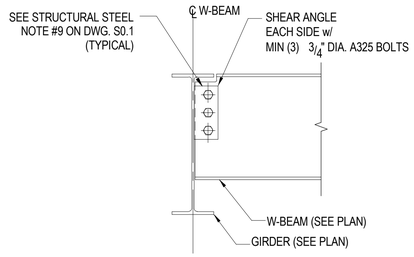

TYPICAL BEAM TO GIRDER SHEAR CONNECTION DETAIL

SCALE: NO SCALE

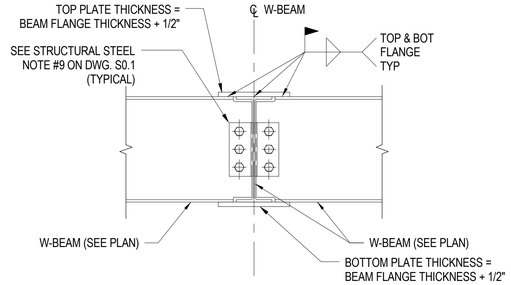

TYPICAL BEAM TO BEAM MOMENT CONNECTION DETAIL

NO SCALE

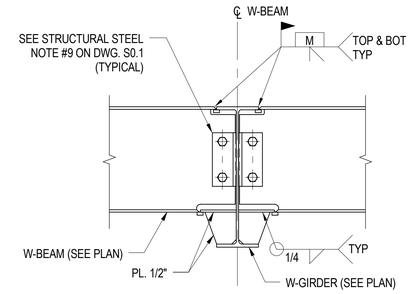

TYPICAL BEAM TO GIRDER MOMENT CONNECTION DETAIL

NO SCALE

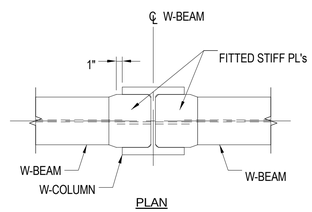

PLAN

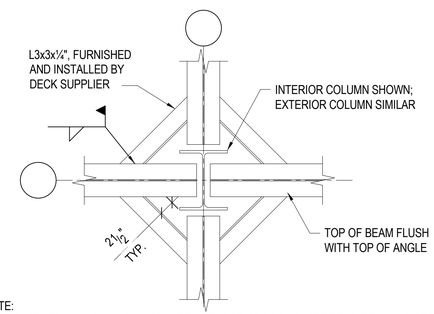

NOTE:
DECK SUPPLIER MAY SUBMIT ALTERNATE METHODS OF DECK SUPPORT AT COLUMNS FOR APPROVAL. DECK SUPPORT SHALL BE CAPABLE OF SUPPORTING CONSTRUCTION LOADS.

TYPICAL DECK SUPPORT AT COLUMN DETAIL

NO SCALE

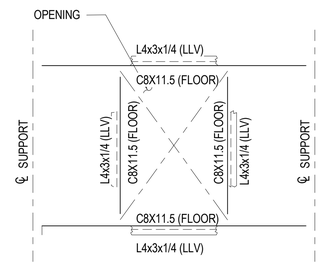

NOTE:
FLOOR AND ROOF OPENINGS SHALL BE TO SUIT THE EQUIPMENT FURNISHED.

TYPICAL FRAMING AT FLOOR/ROOF PENETRATION

NO SCALE

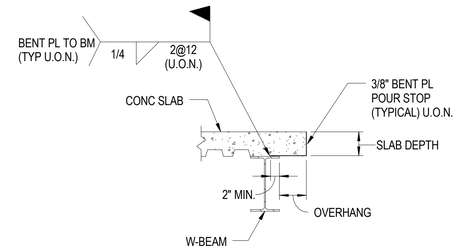

TYPICAL SLAB EDGE DETAIL

NO SCALE

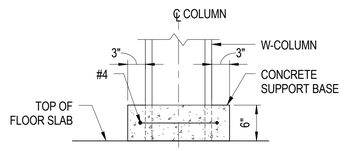

ELEVATION

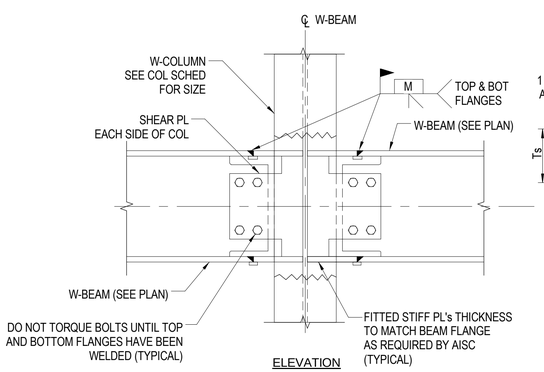

ELEVATION

TYPICAL BEAM TO COLUMN WEB MOMENT CONNECTION DETAIL

NO SCALE

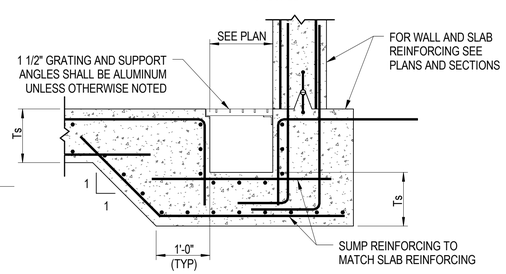

TYPICAL SUMP DETAIL

NO SCALE

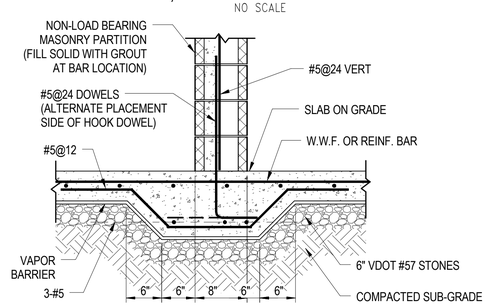

THICKENED SLAB AT PARTITION WALL

SCALE: NONE

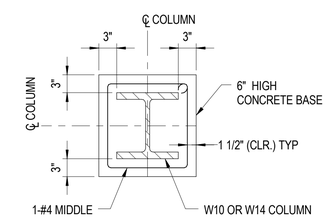

PLAN

TYPICAL TILE SUPPORT BASE DETAIL

SCALE: NONE

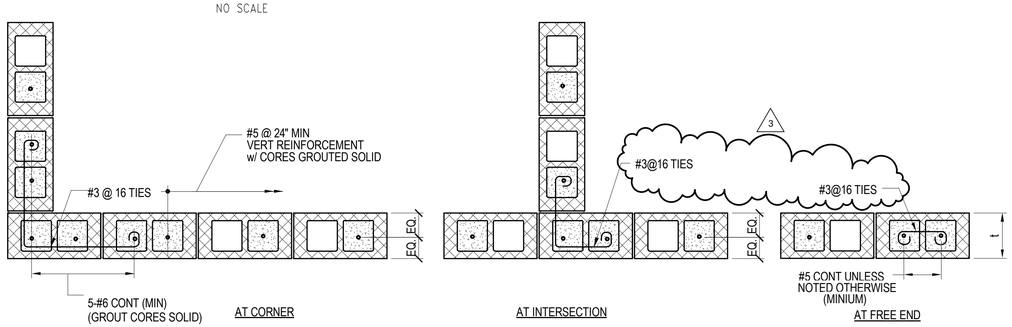

TYPICAL CMU WALL REINFORCING DETAILS AT STAIR SHAFT

NOTES
1. GROUT LINTELS SOLID FOR 1' (MIN.) BEYOND OPENING
2. FOR (1) OPENINGS, CMU LINTEL IS 8" DEEP
   FOR (2) OPENINGS, CMU LINTEL IS 16" DEEP
   FOR (3) OPENINGS, CUM LINTEL IS 24" DEEP,
   UNLESS OTHERWISE NOTED.
3. BOND BEAM REINFORCEMENT NOT SHOWN FOR CLARITY.

LEGEND
(1) BOTH EDGES OF OPENING 2'-0" OR LESS
(2) EITHER EDGE OF OPENING EXCEED 2'-0" BUT LESS THAN 4'-0"
(3) EITHER EDGE OF OPENING EXCEEDS OR EQUALS 4'-0"

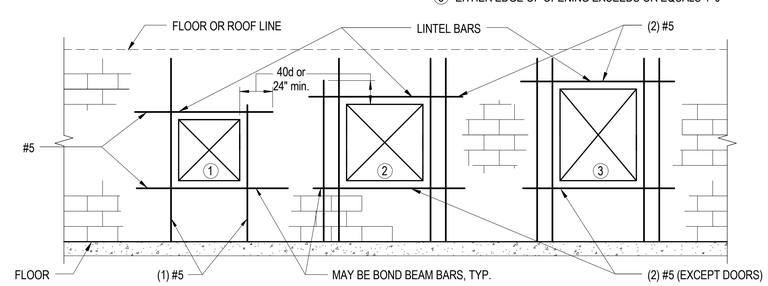

TYP. CMU OPENING REINFORCEMENT

NO SCALE

ISSUED	
35% SUBMISSION	07/06/07
95% SUBMISSION	04/14/08
REVISED 95% SUBMISSION	05/16/08
BID DOCUMENTS	01/25/09
FOR PERMIT ONLY-NOT FOR CONSTRUCTION	01/25/09

COUNTY OF KING GEORGE, VIRGINIA
KING GEORGE COUNTY GOVERNMENT CENTER
10459 COURTHOUSE ROAD
KING GEORGE, VA 22485

SHERIFF'S OFFICE

KEY PLAN

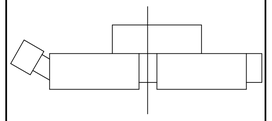

GRAPHIC SCALES

801 South Caroline Street, Baltimore, MD 21231
WHITMAN, REQUARDT & ASSOCIATES, LLP
ENGINEERS, ARCHITECTS AND PLANNERS

TYPICAL STRUCTURAL DETAILS

Drawing No.

S0.3

Scale: As indicated		
Date: 01/25/09	Sheet 114 of 223	
Des: CV	Drawn: AAB	Check: EF

3/3/2009 4:43:56 PM

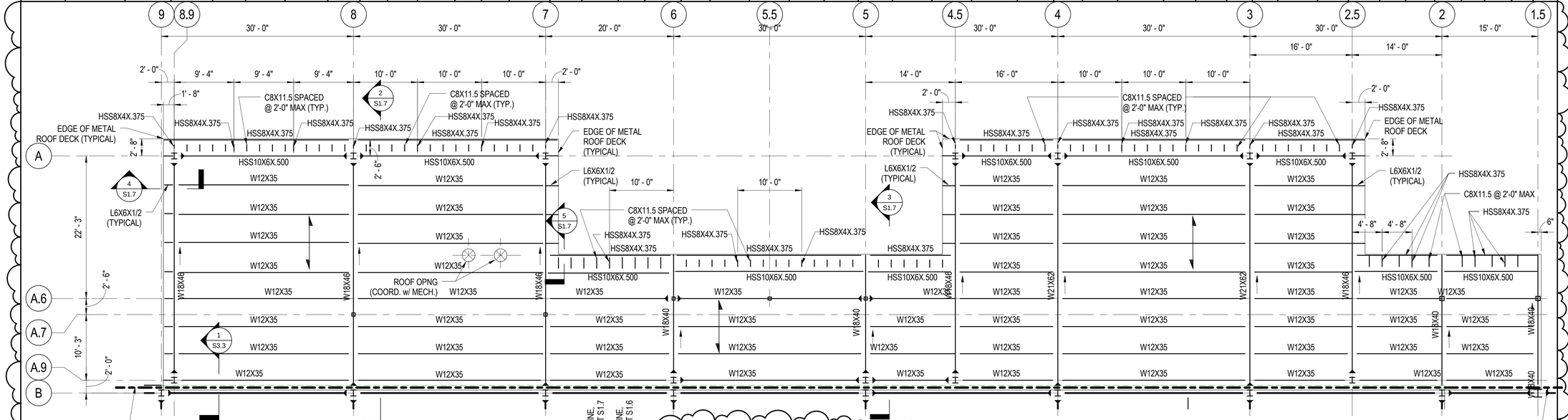

LOW ROOF FRAMING PLAN

1 / S1.7 — 1/8" = 1'-0"

DRAWING NOTES

1. REFER TO SHEET S0.1 FOR GENERAL STRUCTURAL NOTES.
2. REFER TO SHEET S0.2, AND S0.3 FOR TYPICAL STRUCTURAL DETAILS
3. REFER TO MECHANICAL DRAWINGS FOR THE LOCATIONS OF ROOF OPENINGS.
6. REFER TO SHEET S6.1 FOR COLUMN SCHEDULE.
7. ROOF CONSTRUCTION CONSISTS OF A 1.5", 18 GAUGE METAL DECK OVER ROOF FRAMING.
8. REFER TO SHEET S1.8 FOR STRUCTURAL LEGEND.

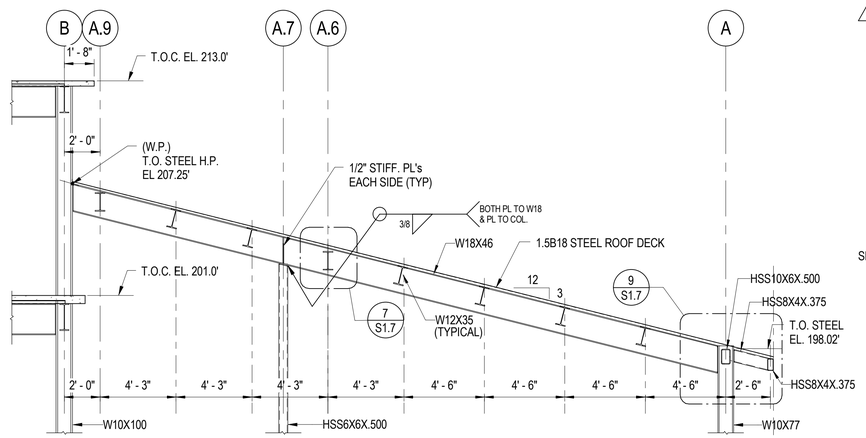

2 / S1.7 SECTION — 1/4" = 1'-0"

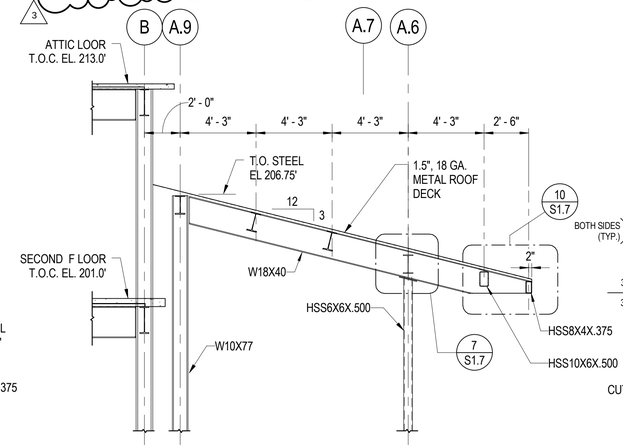

3 / S1.7 SECTION — 1/4" = 1'-0"

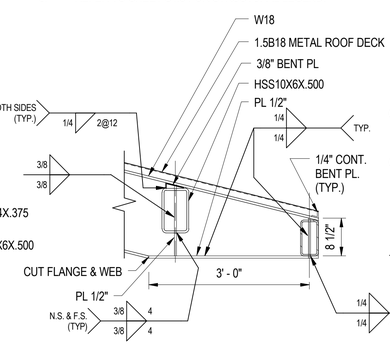

10 / S1.7 DETAIL — 3/4" = 1'-0"

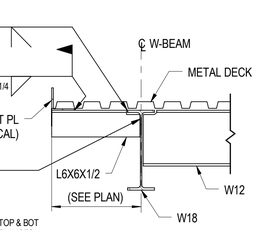

4 / S1.7 SECTION — 3/4" = 1'-0"

DELETED ALL UNASSIGNED SECTION MARKS

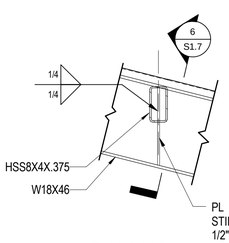

5 / S1.7 SECTION — 3/4" = 1'-0"

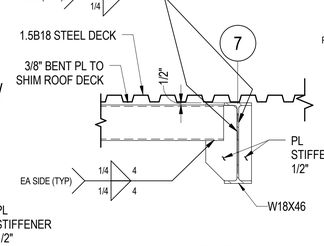

6 / S1.7 SECTION — 3/4" = 1'-0"

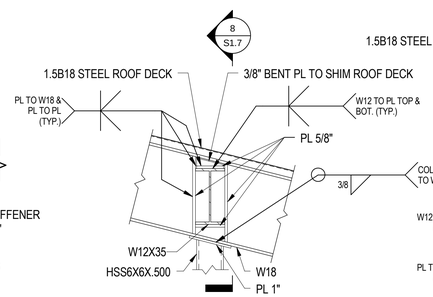

7 / S1.7 DETAIL — 3/4" = 1'-0"

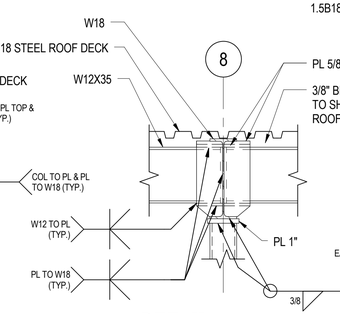

8 / S1.7 DETAIL — 3/4" = 1'-0"

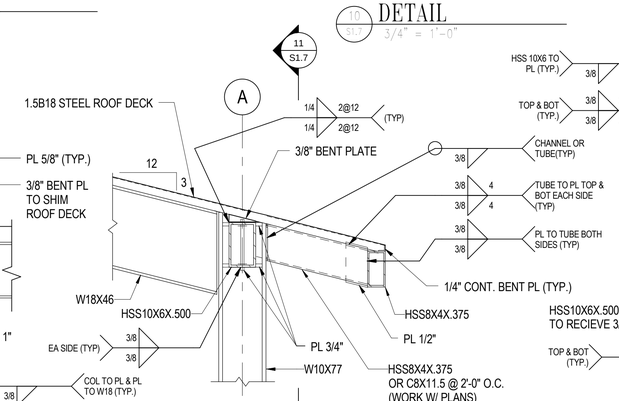

9 / S1.7 DETAIL — 3/4" = 1'-0"

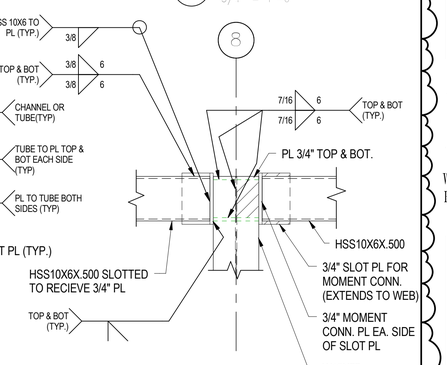

11 / S1.7 DETAIL — 3/4" = 1'-0"

ISSUED	
35% SUBMISSION	07/06/07
95% SUBMISSION	04/14/08
REVISED 95% SUBMISSION	05/16/08
BID DOCUMENTS	01/25/09
FOR PERMIT ONLY-NOT FOR CONSTRUCTION	01/25/09

COUNTY OF KING GEORGE, VIRGINIA

KING GEORGE COUNTY GOVERNMENT CENTER

10459 COURTHOUSE ROAD
KING GEORGE, VA 22485

SHERIFF'S OFFICE

KEY PLAN

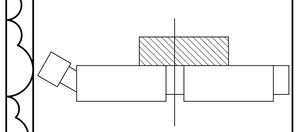

GRAPHIC SCALES

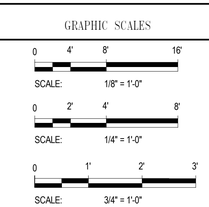

801 South Caroline Street, Baltimore, MD 21231
WHITMAN, REQUARDT & ASSOCIATES, LLP
ENGINEERS, ARCHITECTS AND PLANNERS

LOW ROOF FRAMING PLAN AND SECTIONS

Drawing No.

S1.7

Scale: As indicated		
Date: 01/25/09	Sheet 121 of 223	
Des: CV	Drawn: AAB	Check: EF

3/3/2009 4:43:57 PM

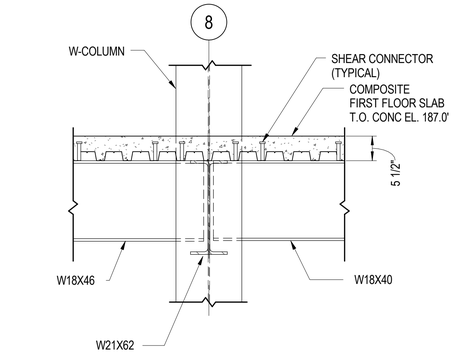

1 SECTION
S5.4 3/4" = 1'-0"

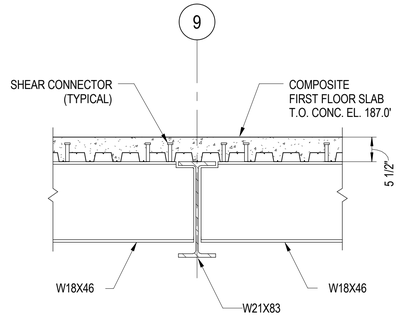

2 SECTION
S5.4 3/4" = 1'-0"

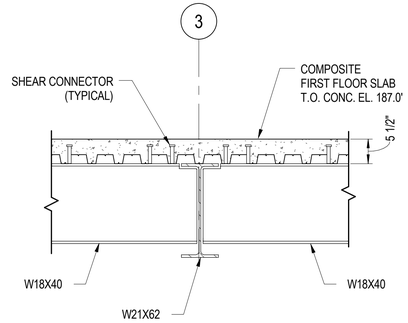

3 SECTION
S5.4 3/4" = 1'-0"

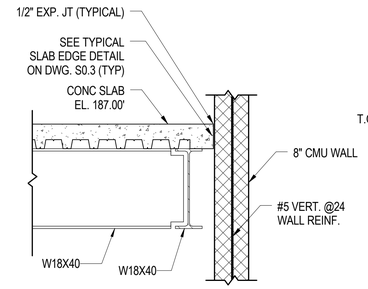

4 SECTION
S5.4 3/4" = 1'-0"

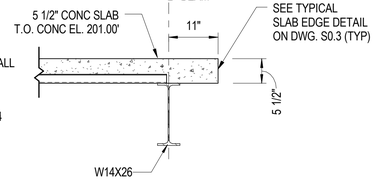

5 SECTION
S5.4 3/4" = 1'-0"

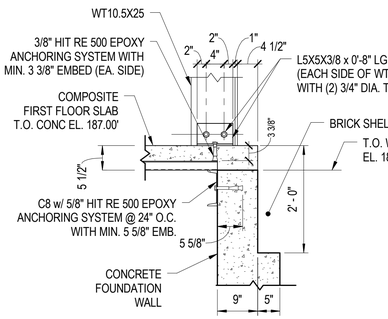

NOTE: WALL REINFORCING NOT SHOWN FOR CLARITY

6 SECTION
S5.4 3/4" = 1'-0"

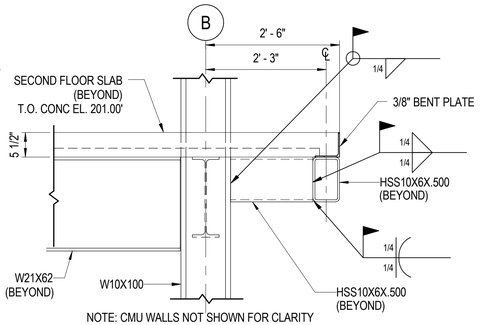

NOTE: CMU WALLS NOT SHOWN FOR CLARITY

7 SECTION
S5.4 3/4" = 1'-0"

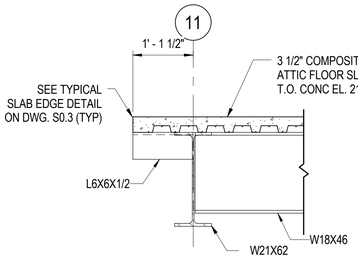

8 SECTION
S5.4 3/4" = 1'-0"

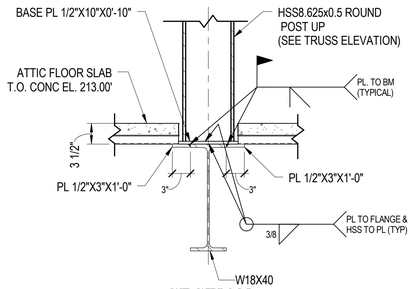

9 SECTION
S5.4 1" = 1'-0"

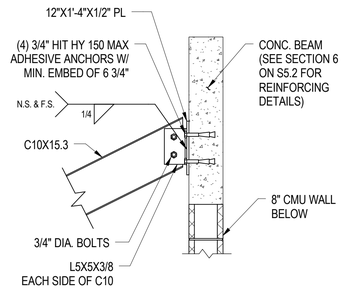

10 DETAIL
S5.4 3/4" = 1'-0"

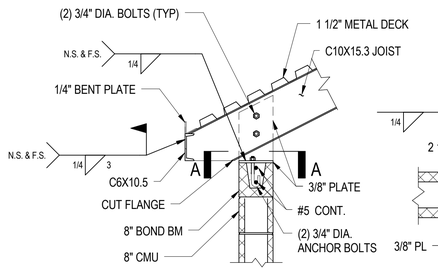

11 DETAIL
S5.4 3/4" = 1'-0"

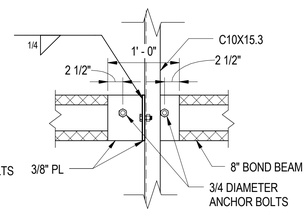

SECTION A-A
1" = 1'-0"

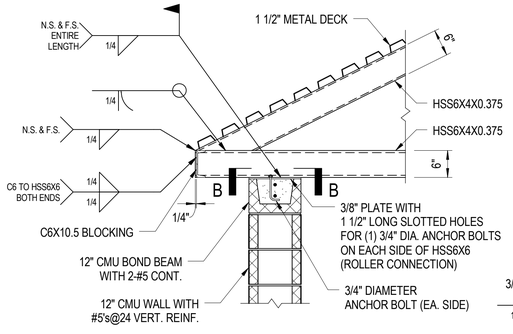

12 DETAIL
S5.4 3/4" = 1'-0"

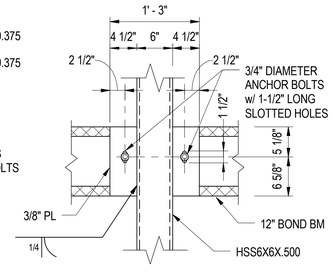

SECTION B-B
1" = 1'-0"

SECTION B'-B' (ANCHOR BOLT HOLES ARE NOT SLOTTED AT THIS END)

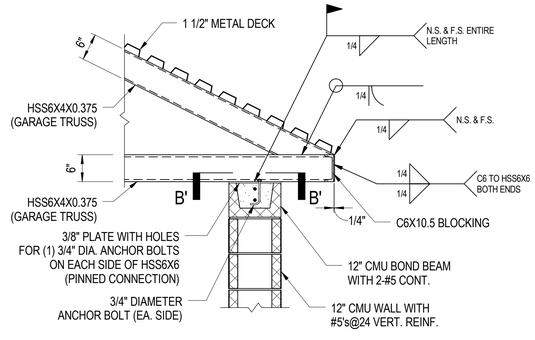

13 DETAIL
S5.4 3/4" = 1'-0"

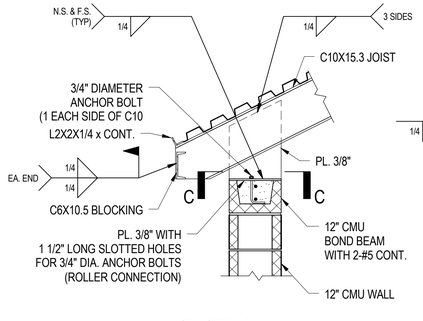

14 SECTION
S5.4 3/4" = 1'-0"

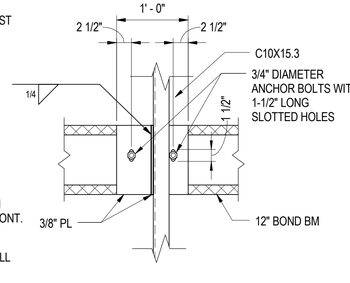

SECTION C-C
1" = 1'-0"

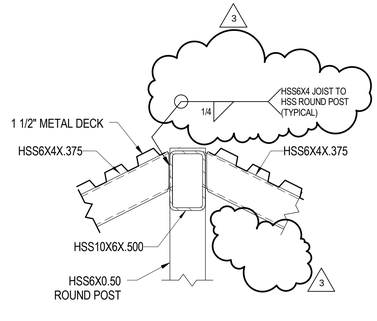

16 DETAIL
S5.4 1" = 1'-0"

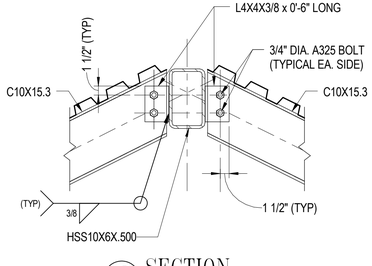

17 SECTION
S5.4 1" = 1'-0"

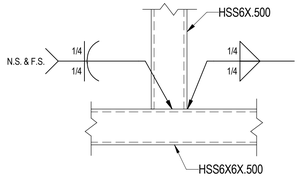

18 DETAIL
S5.4 1" = 1'-0"

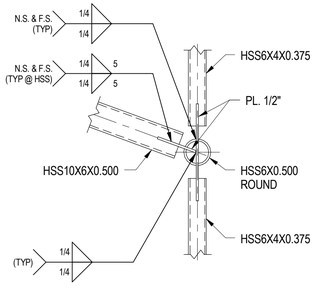

21 DETAIL
S5.4 3/4" = 1'-0"

ISSUED	
35% SUBMISSION	07/06/07
95% SUBMISSION	04/14/08
REVISED 95% SUBMISSION	05/16/08
BID DOCUMENTS	01/25/09
FOR PERMIT ONLY-NOT FOR CONSTRUCTION	01/25/09

COUNTY OF KING GEORGE, VIRGINIA

KING GEORGE COUNTY GOVERNMENT CENTER

10459 COURTHOUSE ROAD
KING GEORGE, VA 22485

SHERIFF'S OFFICE

KEY PLAN

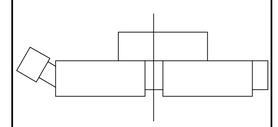

GRAPHIC SCALES

0 1' 2' 3'
SCALE: 3/4" = 1'-0"

0 6" 1' 2'
SCALE: 1" = 1'-0"

WR&A

801 South Caroline Street, Baltimore, MD 21231
WHITMAN, REQUARDT & ASSOCIATES, LLP
ENGINEERS, ARCHITECTS AND PLANNERS

SECTIONS AND DETAILS

Drawing No.

S5.4

Scale: As indicated		
Date: 01/25/09	Sheet 133 of 223	
Des: EF	Drawn: AAB	Check: EF

3/3/2009 4:44:04 PM

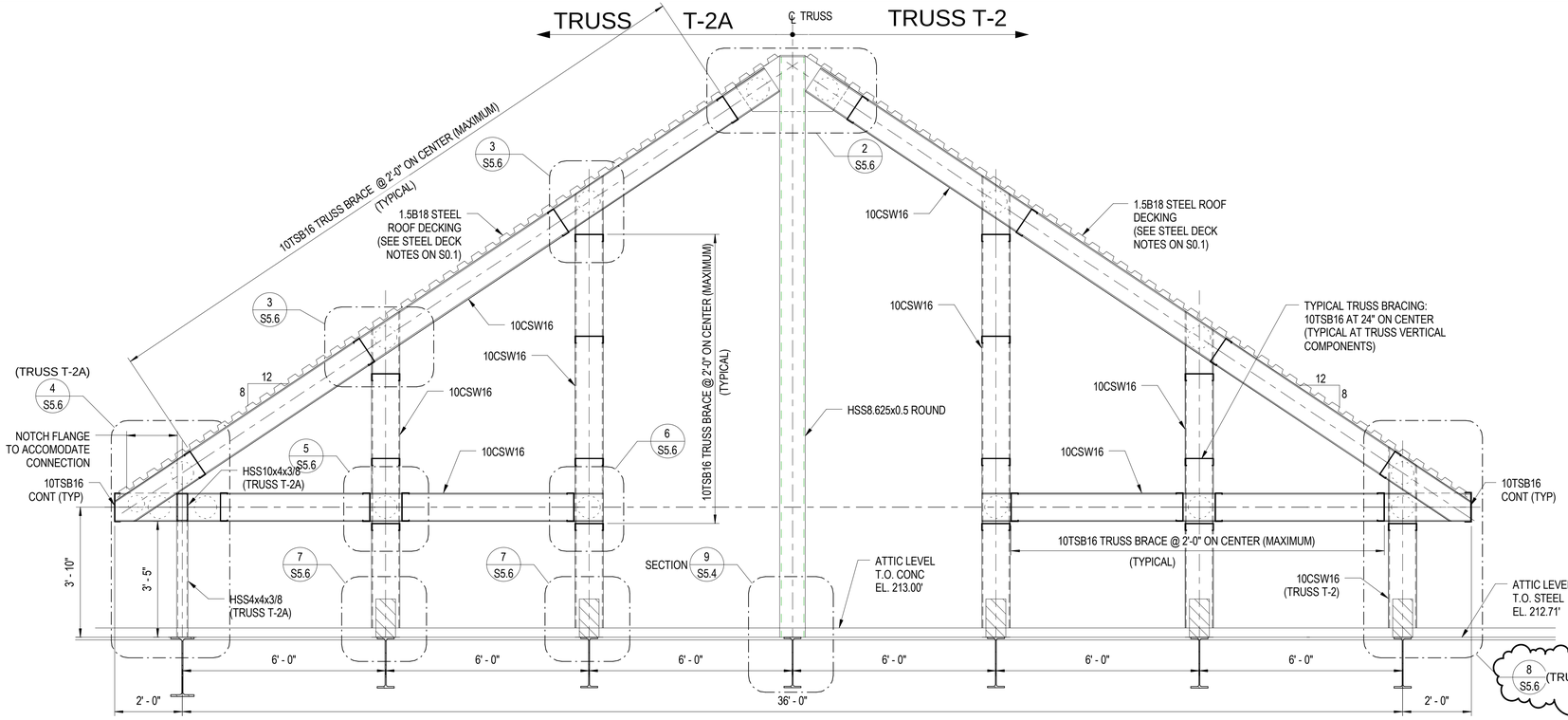

NOTE: ALL JOINT CONNECTIONS AND BRACING CONFIGURATION SYMMETRICAL ABOUT TRUSS CENTERLINE (U.O.N.)

1 S5.6 ROOF TRUSS T-2/T-2A ELEVATION
1/2" = 1'-0"

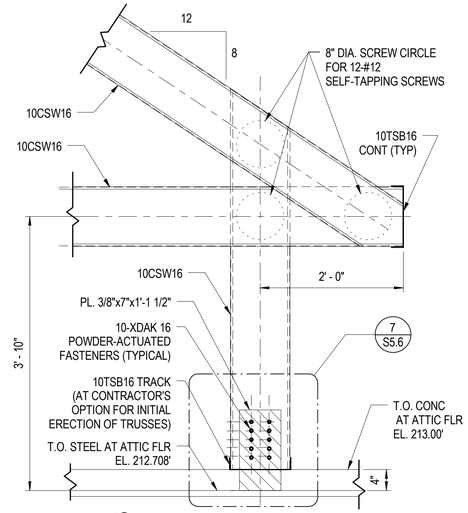

6 S5.6 DETAIL (TRUSS T-2)
1" = 1'-0"

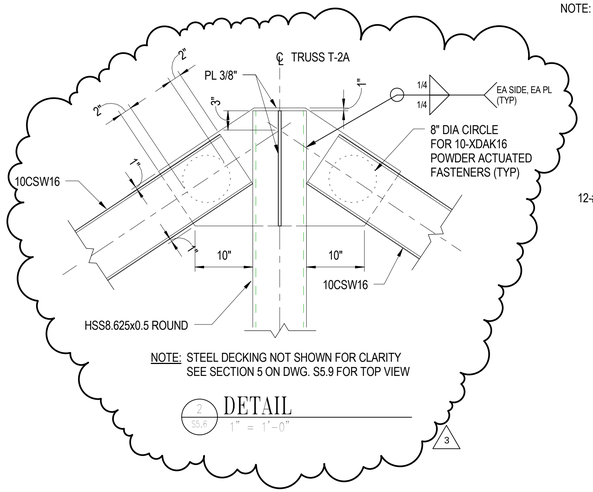

2 S5.6 DETAIL
1" = 1'-0"

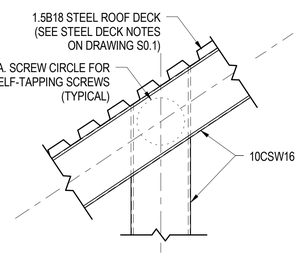

3 S5.6 DETAIL
1" = 1'-0"

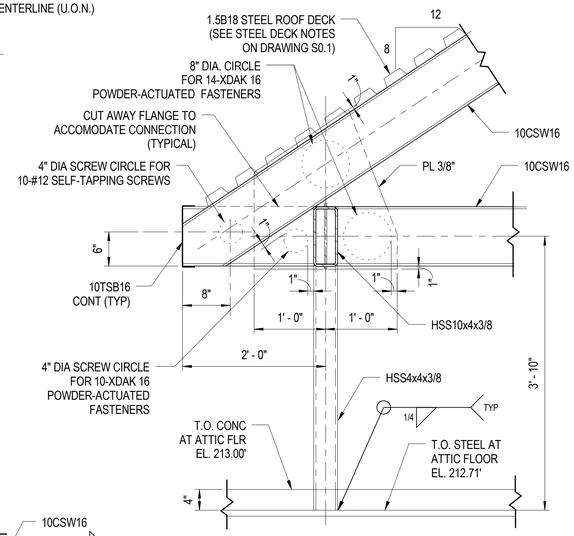

4 S5.6 DETAIL (TRUSS T-2A)
1" = 1'-0"

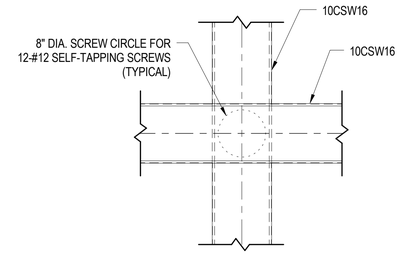

5 S5.6 DETAIL
1" = 1'-0"

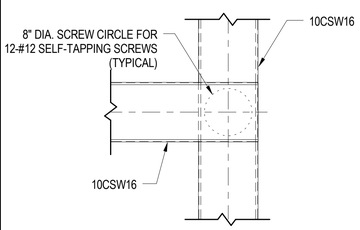

6 S5.6 DETAIL
1" = 1'-0"

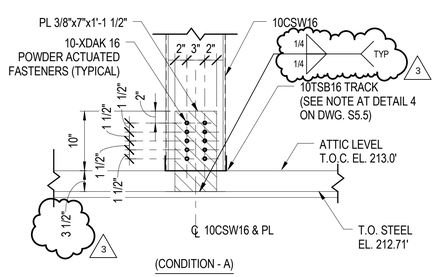

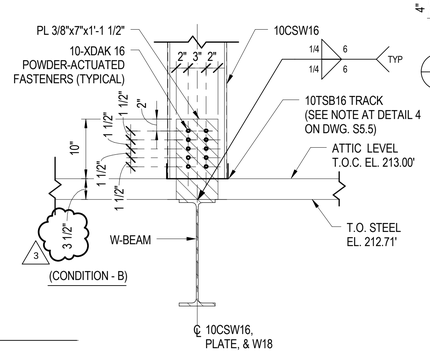

7 S5.6 DETAIL
1" = 1'-0"

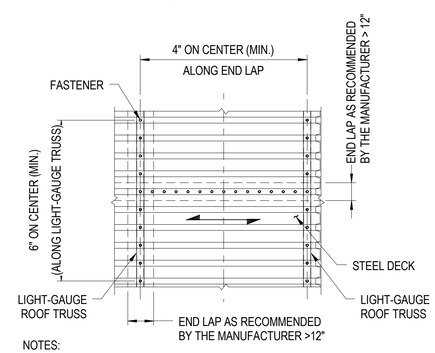

NOTES:

(a) USE #10 SELF TAPPING SCREWS WHEN CONNECTING TO LIGHT-GAUGE.
(b) USE X-DAK 16 WHEN CONNECTING TO STRUCTURAL STEEL AND STEEL PLATES.
(c) LAP DISTANCE SHALL BE PER THE MANUFACTURER'S RECOMMENDATIONS, BUT NOT LESS THAN 12"
(d) DO NOT STAGGER END LAPS.
(e) USE 3-SPANS CONTINUOUS ON LIGHT-GAUGE TRUSSES.

TYPICAL STEEL DECK TO LIGHT-GAUGE TRUSS FASTENING PATTERN
NO SCALE

ISSUED	
35% SUBMISSION	07/06/07
95% SUBMISSION	04/14/08
REVISED 95% SUBMISSION	05/16/08
BID DOCUMENTS	01/25/09
FOR PERMIT ONLY-NOT FOR CONSTRUCTION	01/25/09

COUNTY OF KING GEORGE, VIRGINIA
KING GEORGE COUNTY GOVERNMENT CENTER
10459 COURTHOUSE ROAD
KING GEORGE, VA 22485

SHERIFF'S OFFICE

KEY PLAN

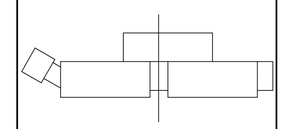

GRAPHIC SCALES

0 1' 2' 4'
SCALE: 1/2" = 1'-0"

0 6" 1' 2'
SCALE: 1" = 1'-0"

801 South Caroline Street, Baltimore, MD 21231
WHITMAN, REQUARDT & ASSOCIATES, LLP
ENGINEERS, ARCHITECTS AND PLANNERS

ROOF TRUSS T-2/T-2A ELEVATIONS & DETAILS

Drawing No.

S5.6

Scale: As indicated		
Date: 01/25/09	Sheet 135 of 223	
Des: CV	Drawn: AAB	Check: EF

3/3/2009 4:44:06 PM

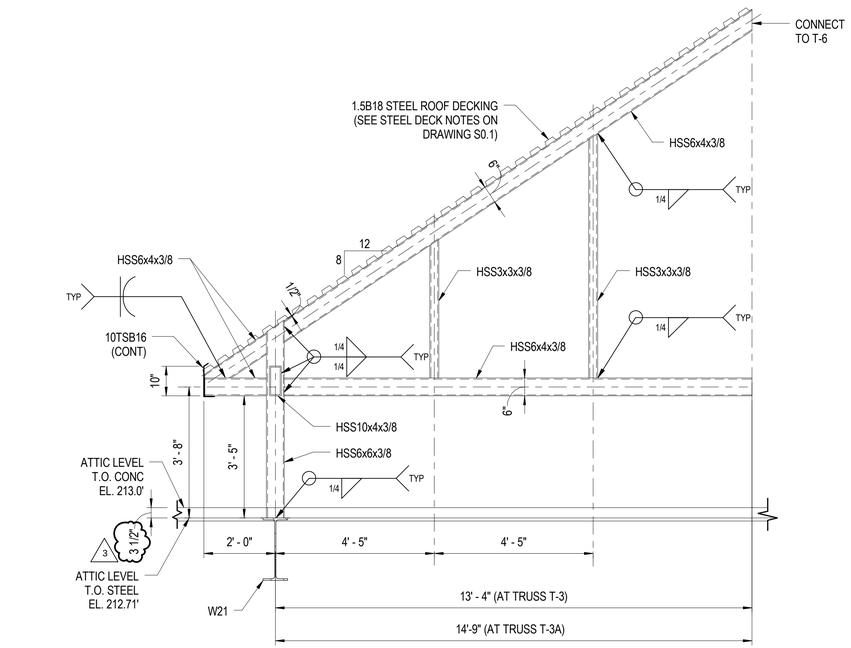

1 ROOF TRUSS T-3 & T-3A ELEVATION
1/2" = 1'-0"

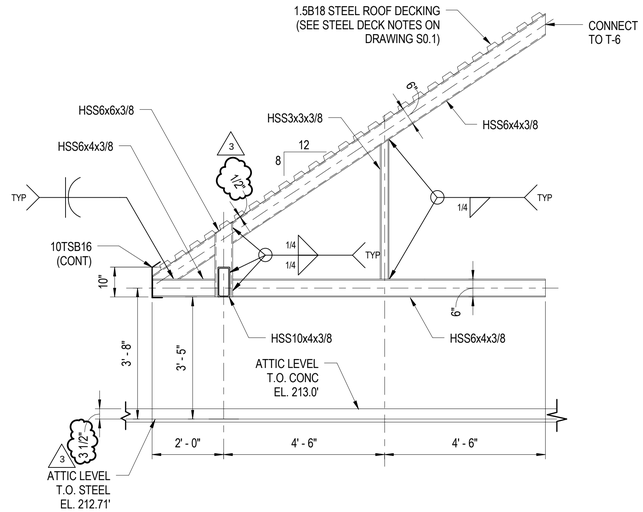

2 ROOF TRUSS T-4 ELEVATION
1/2" = 1'-0"

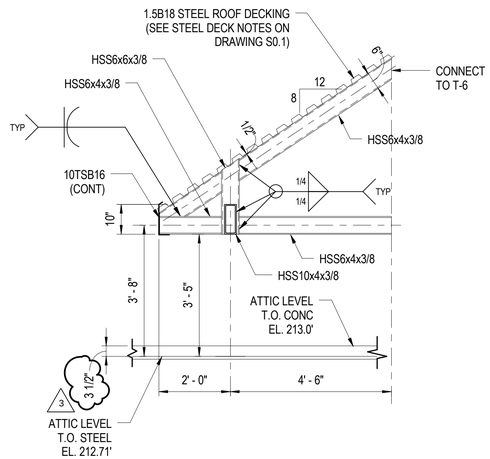

3 ROOF TRUSS T-5 ELEVATION
1/2" = 1'-0"

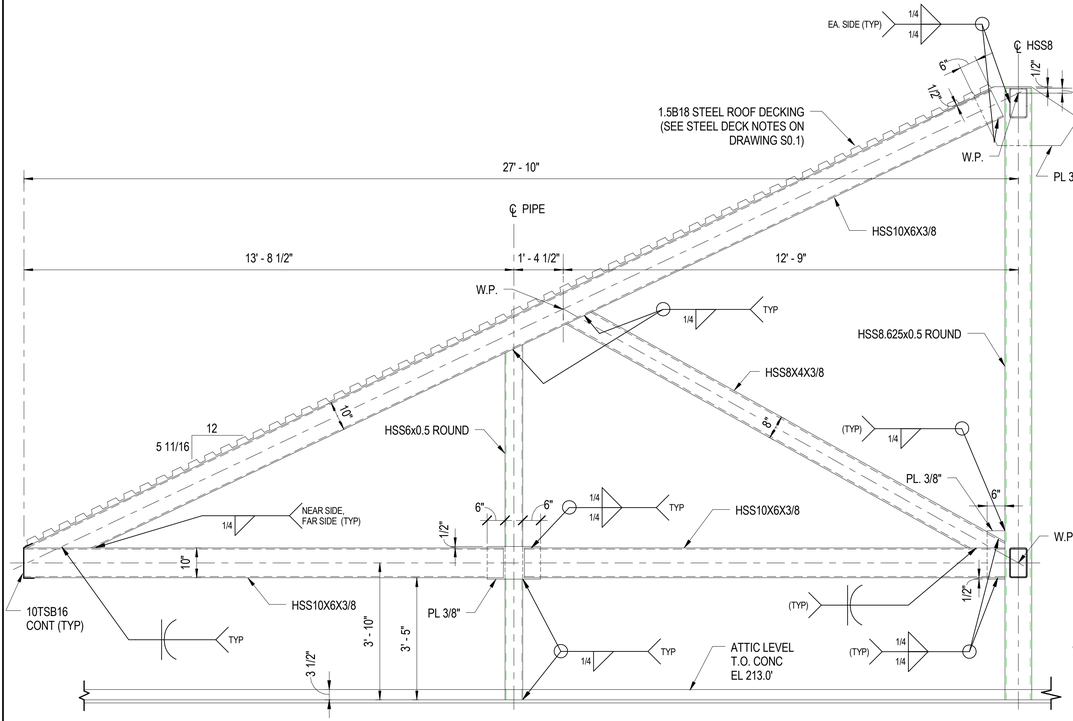

4 ROOF TRUSS T-6 ELEVATION
1/2" = 1'-0"

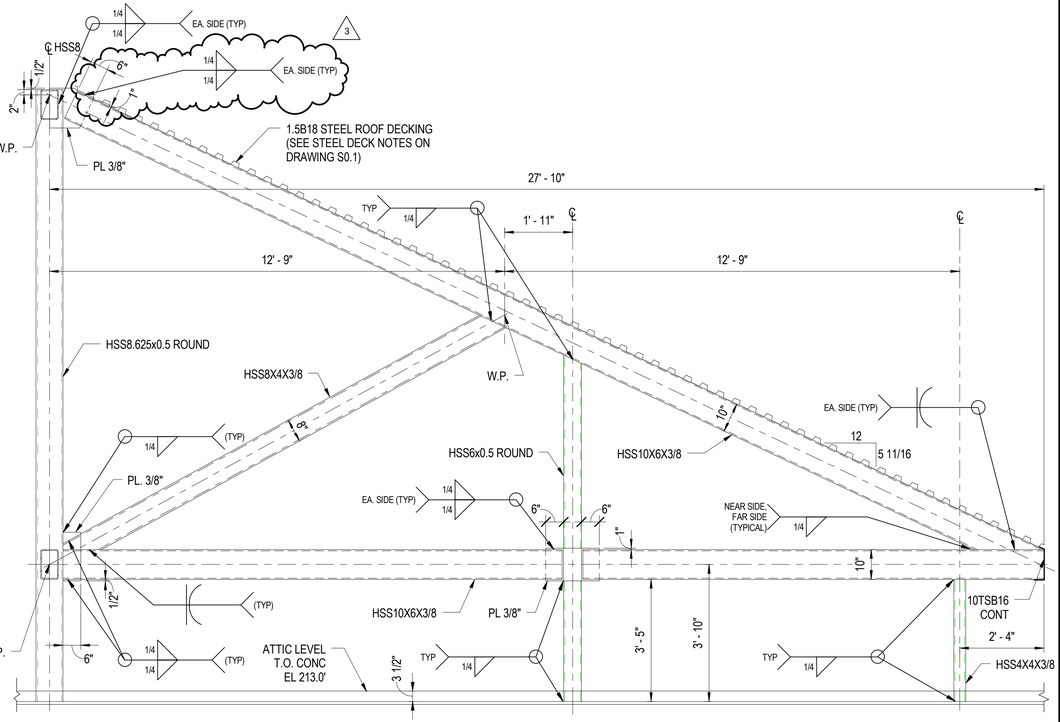

5 ROOF TRUSS T-7 ELEVATION
1/2" = 1'-0"

ISSUED	
35% SUBMISSION	07/06/07
95% SUBMISSION	04/14/08
REVISED 95% SUBMISSION	05/16/08
BID DOCUMENTS	01/25/09
FOR PERMIT ONLY-NOT FOR CONSTRUCTION	01/25/09

COUNTY OF KING GEORGE, VIRGINIA

KING GEORGE COUNTY GOVERNMENT CENTER

10459 COURTHOUSE ROAD
KING GEORGE, VA 22485

SHERIFF'S OFFICE

KEY PLAN

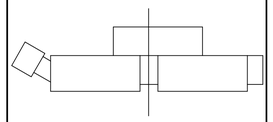

GRAPHIC SCALES

0 1' 2' 4'
SCALE: 1/2" = 1'-0"

801 South Caroline Street, Baltimore, MD 21231
WHITMAN, REQUARDT & ASSOCIATES, LLP
ENGINEERS, ARCHITECTS AND PLANNERS

ROOF TRUSS T-3, T-3A, T-4, T-5, T-6 & T-7 ELEVATIONS & DETAILS

Drawing No.

S5.8

Scale: 1/2" = 1'-0"		
Date: 01/25/09	Sheet 137 of 223	
Des: CV	Drawn: AAB	Check: EF

3/3/2009 4:44:07 PM

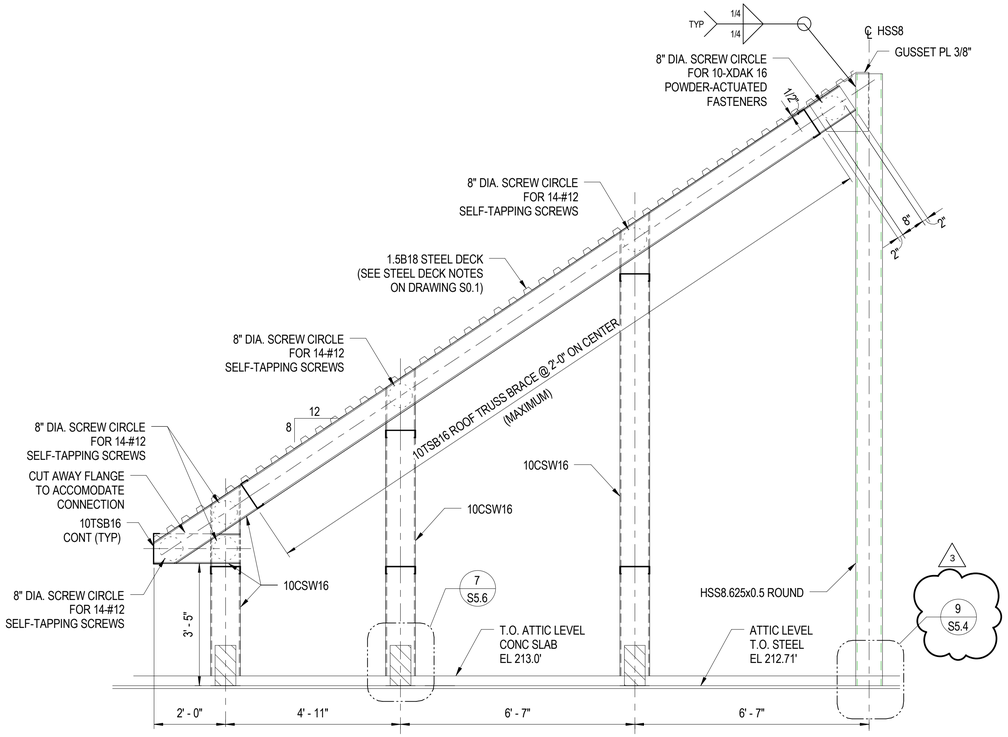

NOTE: REFER TO TRUSS T-1 ELEVATION ON DRAWING S5.5 FOR TRUSS BRACING SPACING ARRANGEMENT.

1 S5.9 ROOF TRUSS T-8 ELEVATION
1/2" = 1'-0"

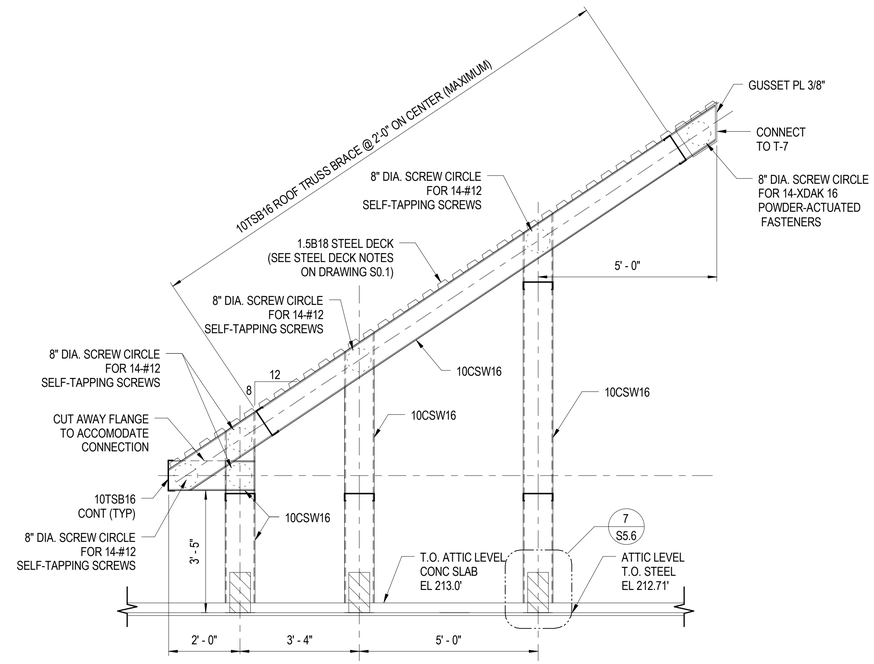

NOTE: REFER TO TRUSS T-1 ELEVATION ON DRAWING S5.5 FOR TRUSS BRACING SPACING ARRANGEMENT.

2 S5.9 ROOF TRUSS T-9 ELEVATION
1/2" = 1'-0"

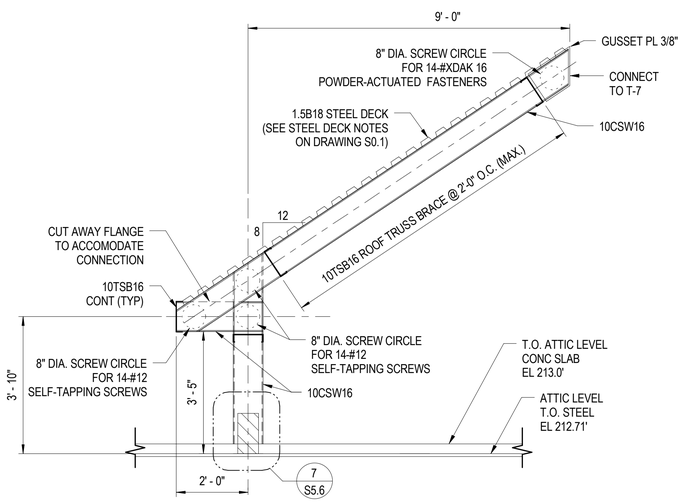

NOTE: REFER TO TRUSS T-1 ELEVATION ON DRAWING S5.5 FOR TRUSS BRACING SPACING ARRANGEMENT.

3 S5.9 ROOF TRUSS T-10 ELEVATION
1/2" = 1'-0"

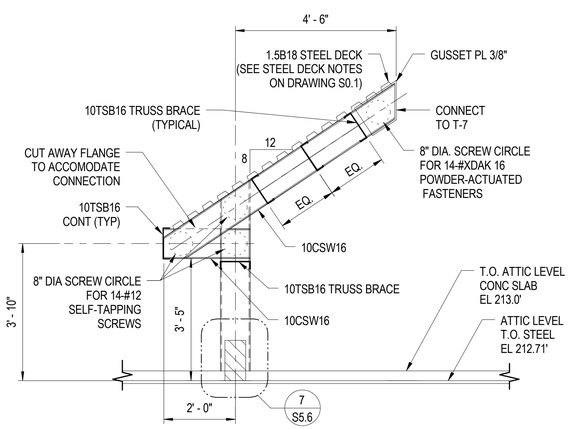

NOTE: REFER TO TRUSS T-1 ELEVATION ON DRAWING S5.5 FOR TRUSS BRACING SPACING ARRANGEMENT.

4 S5.9 ROOF TRUSS T-11 ELEVATION
1/2" = 1'-0"

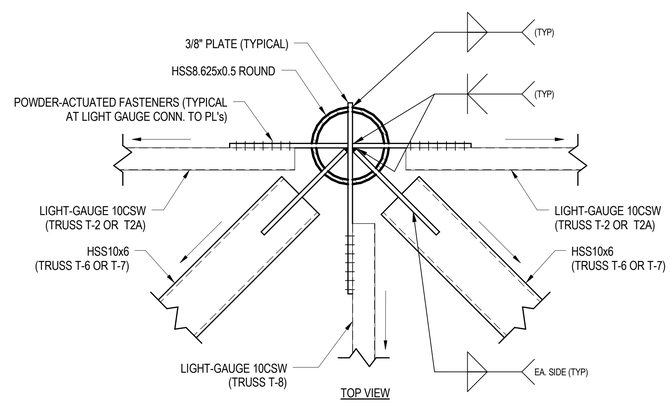

NOTE: REFER TO TRUSS ELEVATIONS AND DETAILS ON S5.5 THRU S5.9 FOR COORDINATING INFORMATION.

5 S5.9 CONNECTION DETAIL AT TOP OF HSS8
1 1/2" = 1'-0"

ISSUED	
35% SUBMISSION	07/06/07
95% SUBMISSION	04/14/08
REVISED 95% SUBMISSION	05/16/08
BID DOCUMENTS	01/25/09
FOR PERMIT ONLY-NOT FOR CONSTRUCTION	01/25/09

COUNTY OF KING GEORGE, VIRGINIA

KING GEORGE COUNTY GOVERNMENT CENTER

10459 COURTHOUSE ROAD
KING GEORGE, VA 22485

SHERIFF'S OFFICE

KEY PLAN

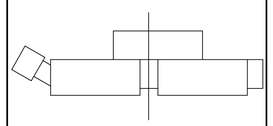

GRAPHIC SCALES

0 1' 2' 3' 4'
SCALE: 1 1/2" = 1'-0"

0 1' 2' 4'
SCALE: 1/2" = 1'-0"

801 South Caroline Street, Baltimore, MD 21231
WHITMAN, REQUARDT & ASSOCIATES, LLP
ENGINEERS, ARCHITECTS AND PLANNERS

ROOF TRUSS T-8, T-9, T-10, T-11 ELEVATIONS & DETAILS

Drawing No.

S5.9

Scale: As indicated		
Date: 01/25/09	Sheet 138 of 223	
Des: CV	Drawn: AAB	Check: EF

3/3/2009 4:14:08 PM